SCAN THIS CODE OR VISIT
WILDWESTEXODUS.COM
FOR ASSEMBLY GUIDES AND MORE!

WEX991399039

5 060504 867603

WILD WEST EXODUS®

RED OAK BRIDGE SET

PART OF THE DYSTOPIAN AGE™

@WILDWESTEXODUS @WARCRADLESTUDIOS

WARNING! NOT A TOY. AGE 14+
HOBBY GAMING PRODUCT
CONTAINS SMALL PARTS

ACHTUNG! KEIN SPIELZEUG. ALTER 14+
HOBBY SPIELPRODUCT
ENTHÄLT KLEINE TEILE

PRECAUCIÓN! NO ES UN JUGUETE EDADES. 14+
PRODUCTO DE HOBBY
CONTIENE PIEZAS PEQUEÑAS

ATTENTION! PAS UN JOUET. ANS 14+
PRODUIT DE JEU HOBBY
CONTIENT DE PETITES PIÈCES

THIS PRODUCT CONTAINS MEDIUM DENSITY FIBREBOARD (CLASS E1)

WARCRADLE STUDIOS™

WARCRADLE STUDIOS IS A TRADING NAME OF WAYLAND GAMES LIMITED. WILD WEST EXODUS IS A TRADEMARK OF WAYLAND GAMES LIMITED. ILLUSTRATIONS AND DESIGNS ARE COPYRIGHT © 2019 WAYLAND GAMES LIMITED. ASSEMBLED IN THE UK.

Parts may need careful removal from the MDF boards with a scalpel, and light sanding of any rough edges. We recommend testing assembling sections before permanently gluing together.

1

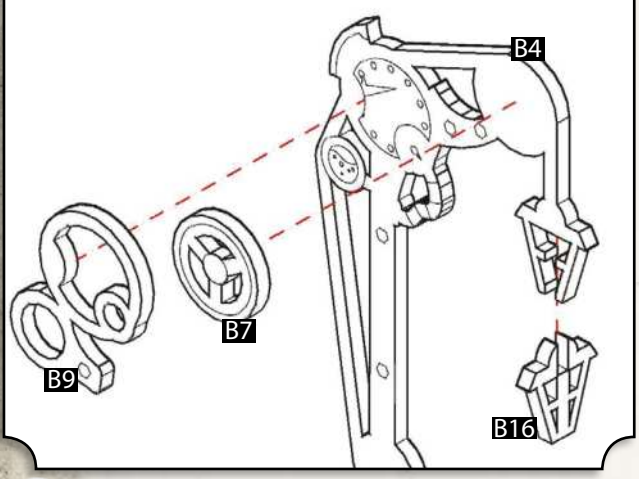

2

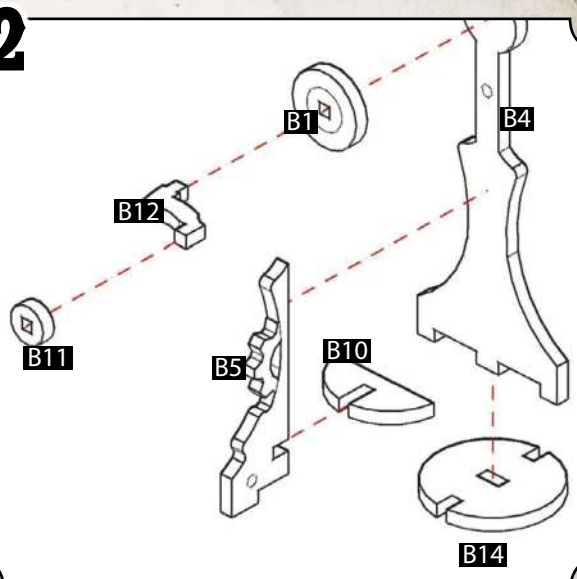

3

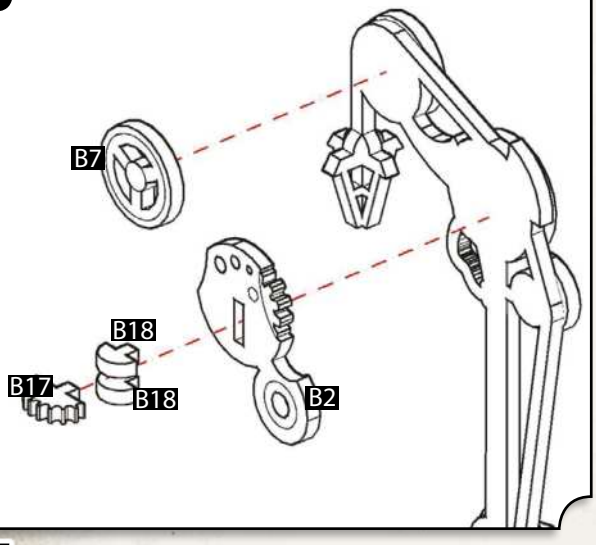

4

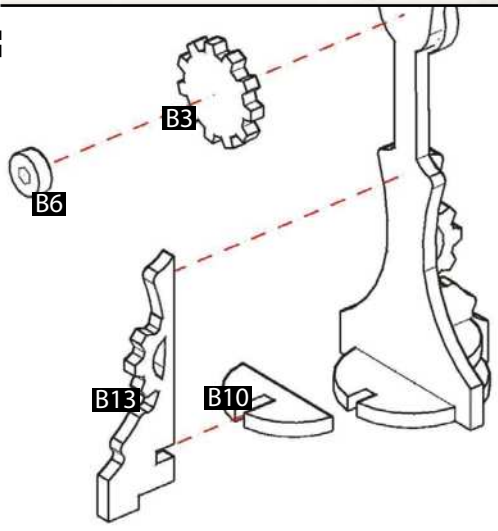

Repeat steps 1-4 for the remaining two lampposts.

5

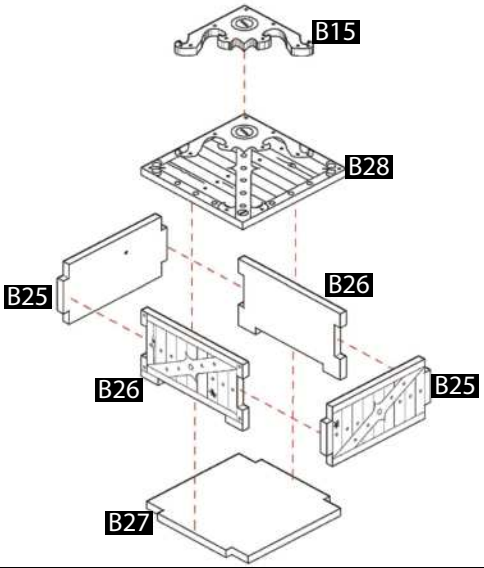

6

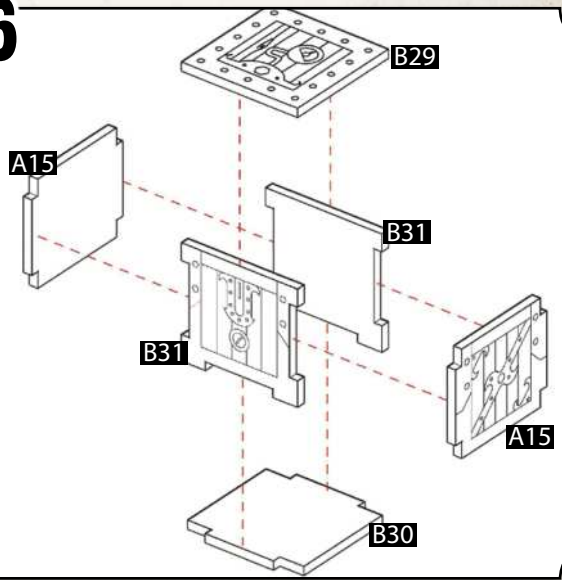

Parts may need careful removal from the MDF boards with a scalpel, and light sanding of any rough edges. We recommend testing assembling sections before permanently gluing together.

7

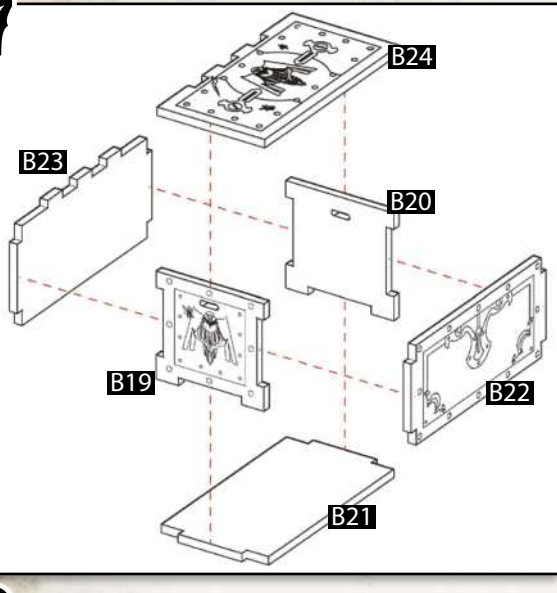

8

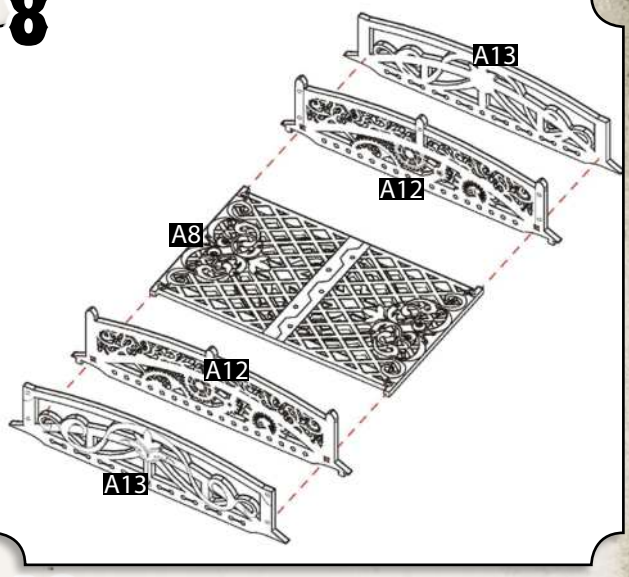

9

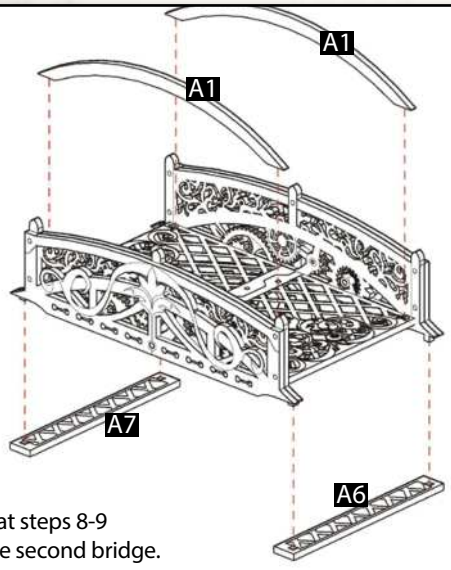

Repeat steps 8-9
for the second bridge.

10

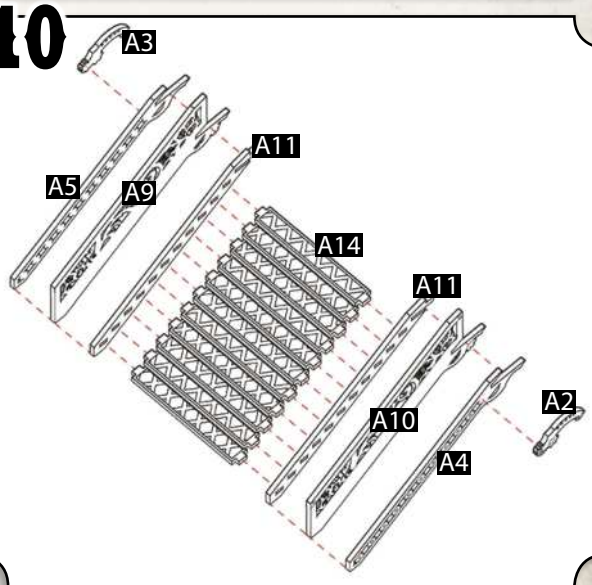

11

Steps can be attached without glue, attach second steps section to other side of the bridge.

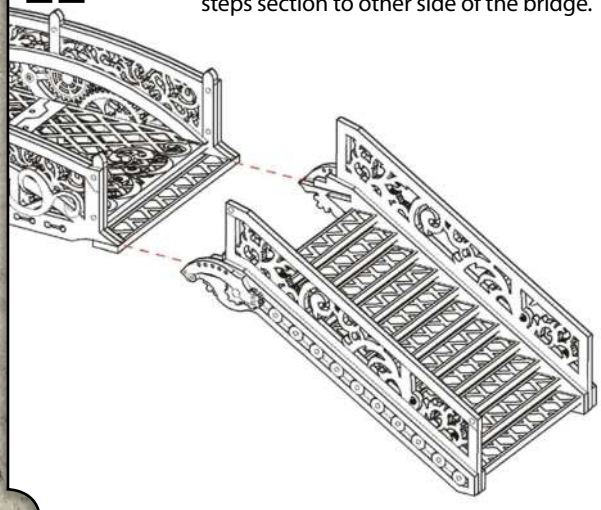

12

Bridge can be used to connect Red Oak Saloon and The Cat House balconies!
(Red Oak Saloon and Cat House sold separately.)

BUILD YOUR OWN TOWN OF RED OAK!
AVAILABLE AT STORE.WILDWESTEXODUS.COM

WILD WEST EXODUS®

The Cat House

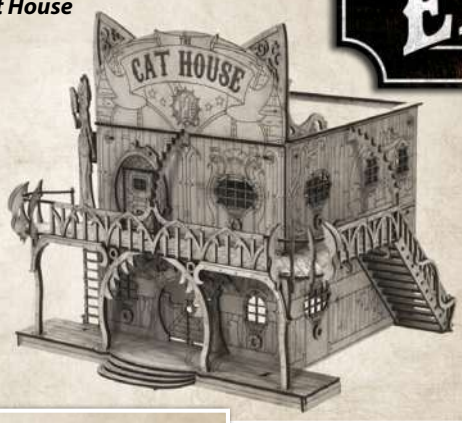

Jail

Residence

Shack

Town House

Metal Smith

Cartwright

Saloon

Crate, Fences and Barrels

Post Office

Bank

Gallows & Clock

Distillery

PART OF THE DYSTOPIAN AGE™ @WILDWESTEXODUS @WARCRADLESTUDIOS

WARNING! NOT A TOY. AGE 14+
HOBBY GAMING PRODUCT
CONTAINS SMALL PARTS

ACHTUNG! KEIN SPIELZEUG. ALTER 14+
HOBBY SPIELPRODUCT
ENTHÄLT KLEINE TEILE

PRECAUCIÓN! NO ES UN JUGUETE EDADES. 14+
PRODUCTO DE HOBBY
CONTIENE PIEZAS PEQUEÑAS

ATTENTION! PAS UN JOUET. ANS 14+
PRODUIT DE JEU HOBBY
CONTIENT DE PETITES PIÈCES

THIS PRODUCT CONTAINS MEDIUM DENSITY FIBREBOARD (CLASS E1)

WARCRADLE STUDIOS™

WARCRADLE STUDIOS IS A TRADING NAME OF WAYLAND GAMES LIMITED. WILD WEST EXODUS IS A TRADEMARK OF WAYLAND GAMES LIMITED. ILLUSTRATIONS AND DESIGNS ARE COPYRIGHT © 2019 WAYLAND GAMES LIMITED. ASSEMBLED IN THE UK.